Lathe chuck guard TF 350

Model	TF 350
Brand	Repar2
Weight	4 kg

approx. 2 weeks from order

€ 333,00



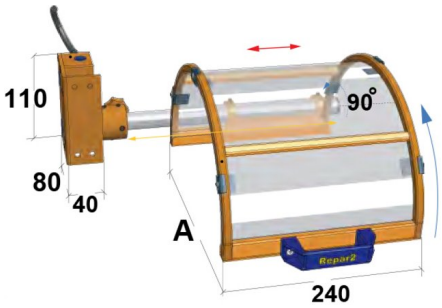

Dimensions and weight

Length	240 mm
Depth	350 mm
Weight	4 kg

Description

safetywindow made out of polycarbonate

steel frame

folding 90°

safety microswitch

further sizes, models and options on request or see catalogues

Further information

Brochures

- katalog_repar2.pdf
- pricelist__2018_04.pdf

Hesse + Co Maschinenfabrik GmbH
IZ Nö Süd, Straße 4, Objekt 8
A-2351 Wiener Neudorf

www.hesse-maschinen.com

T +43-2236-63870-0
F +43-2236-63662
office@hesse-maschinen.com

Notice

Prices ex location, excluding VAT.

The General Terms and Conditions of Delivery of the Austrian Association of the Machine and Steel Construction Industry apply.

We only sell under retention of title, the goods remain our unrestricted property until they have been paid for in full.

Price changes and errors excepted.

Hesse + Co Maschinenfabrik GmbH
IZ Nö Süd, Straße 4, Objekt 8
A-2351 Wiener Neudorf
www.hesse-maschinen.com
T +43-2236-63870-0
F +43-2236-63662
office@hesse-maschinen.com